Fixed rangehoods

WRF910SA/WA, WRF913SA/WA

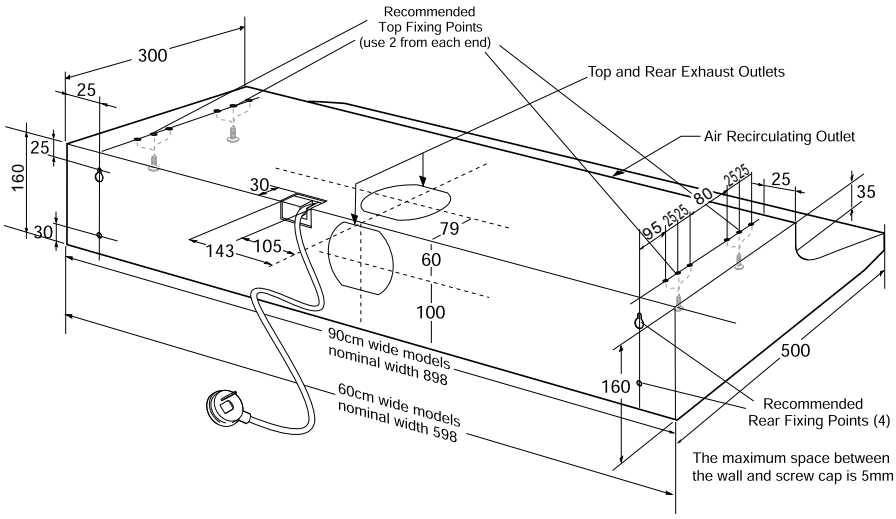

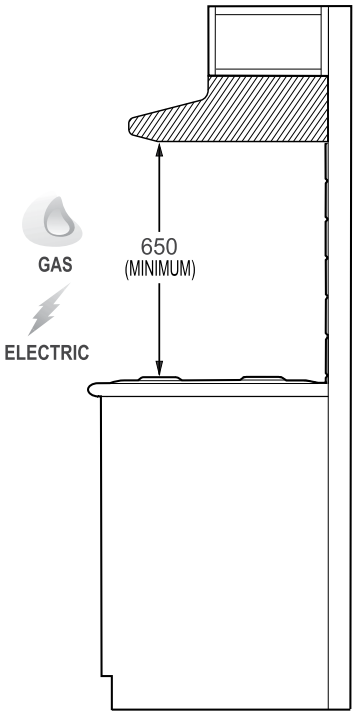

Product (below bench) WxDxH (mm)	898 x 160 x 500
Duct out through, diameter (mm)	top or rear, 125

IMPORTANT

These dimensions are a guide only. All measurements are in millimetres (mm).
For complete installation instructions, refer to the manual provided with product.

© 2020 Electrolux Home Products Pty Ltd. ABN 51 004 762 341. WDIM_Aspire_Apr20